3 Electrical Wiring Diagrams

3.1 Wiring diagram of the Position Control Mode

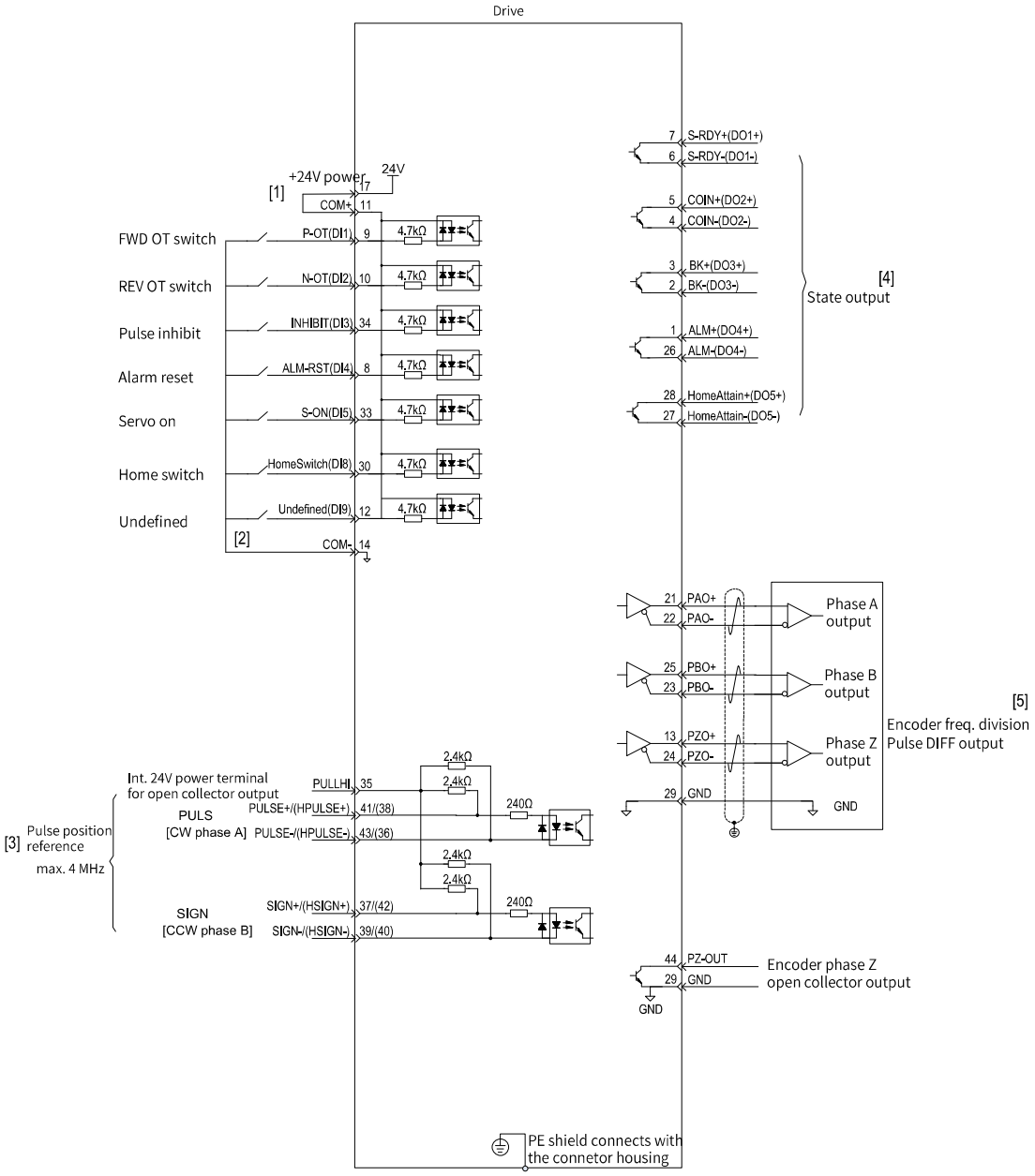

Figure 3-1 Wiring diagram of the Position Control Mode

Note

- [1] The range of the internal +24 V power supply is 20 V to 28 V, with maximum operating current being 200 mA.
- [2] DI8 and DI9 are high-speed DIs that must be used according to their functions assigned.
- [3] Use the shielded twisted pairs for pulse terminals, with both ends of the shield connected to PE. Connect GND and signal GND of the host controller properly. The high-speed and low-speed pulse instruction inputs (differential input) share the same interface. The corresponding function code is set according to the frequency of the input pulse.
- [4] The DO power supply (voltage range: 5 V to 24 V) needs to be prepared by users. The DO terminals support a maximum voltage of 30 VDC and a maximum current of 50 mA.
- [5] Use the shielded twisted pair cable as the frequency-division cable, with both ends of the shield connected to PE. Connect GND and signal GND of the host controller properly.

3.2 Wiring Diagram for Torque Control Mode

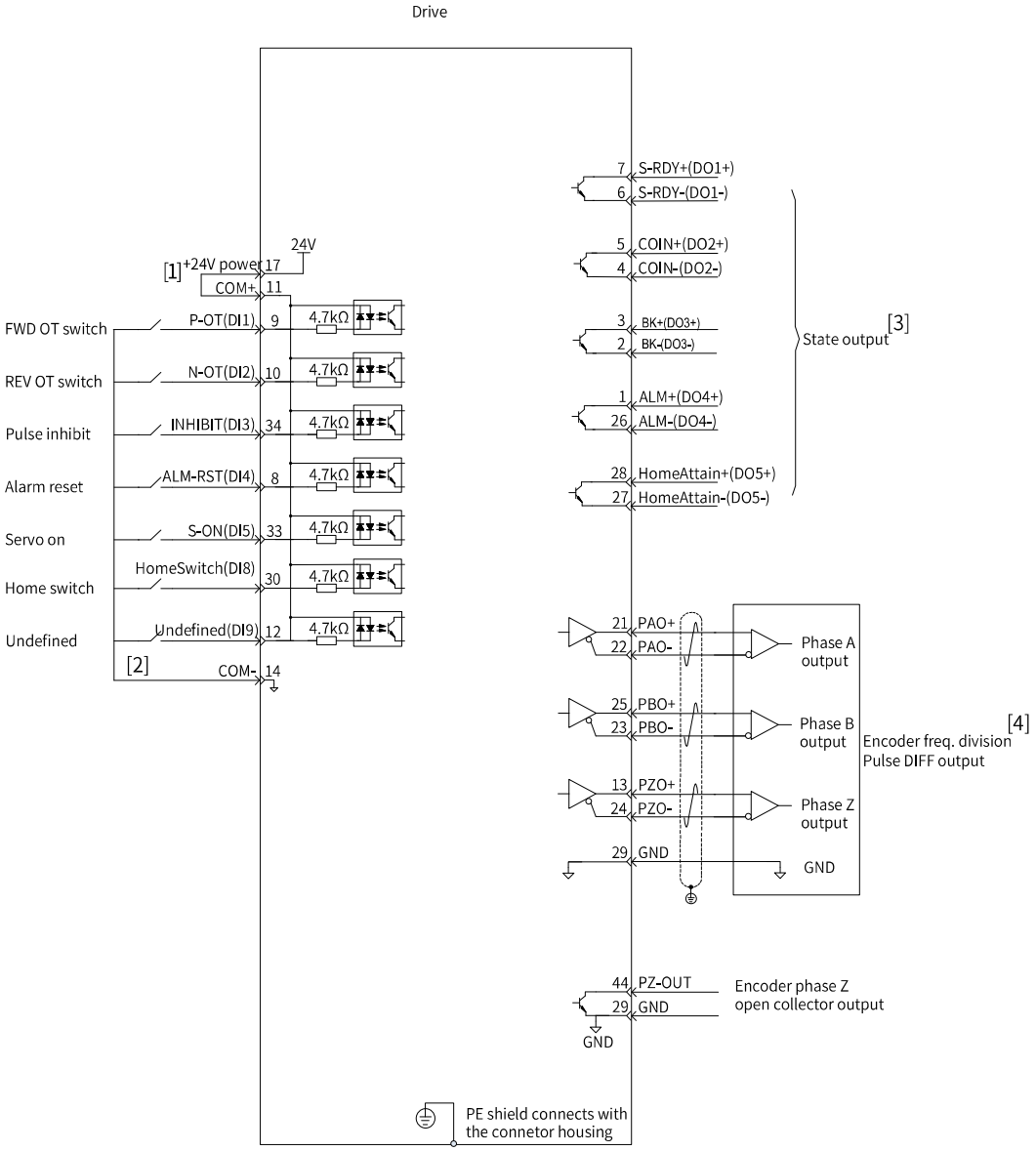

Figure 3-2 Wiring Diagram for Torque Control Mode